A-A

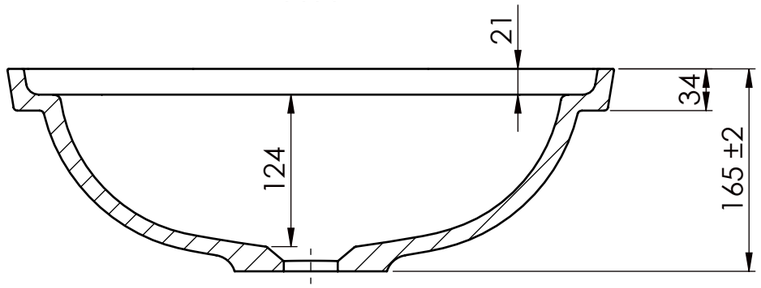

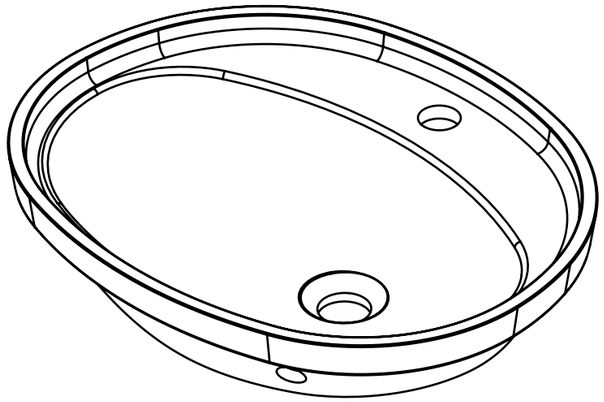

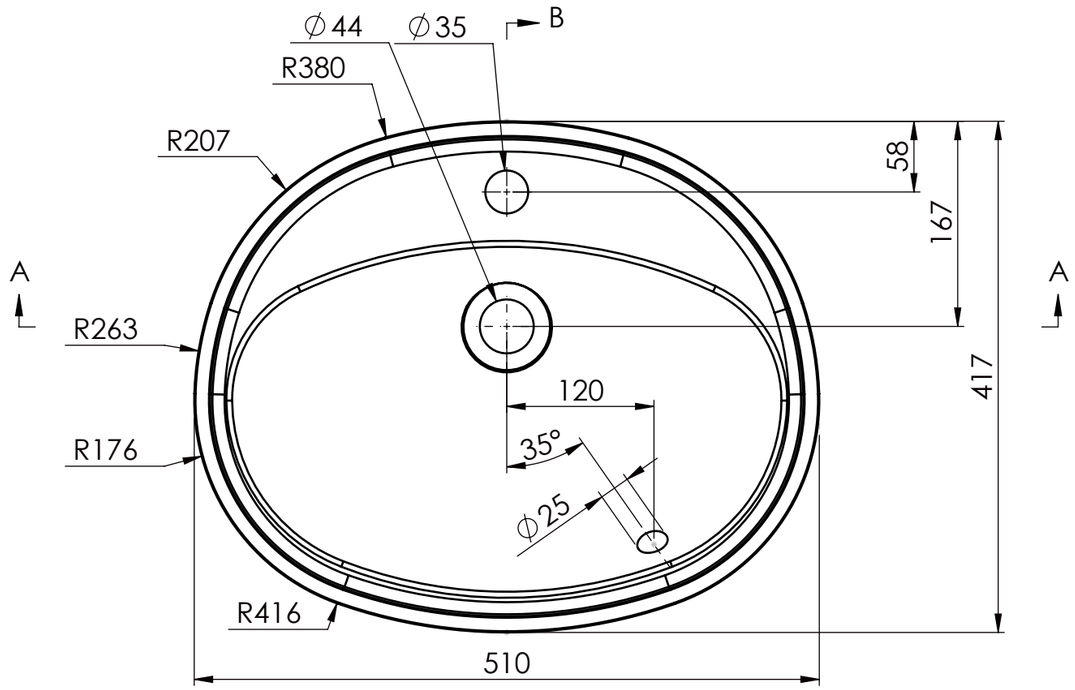

Bottom view/
Widok od dołu

B-B

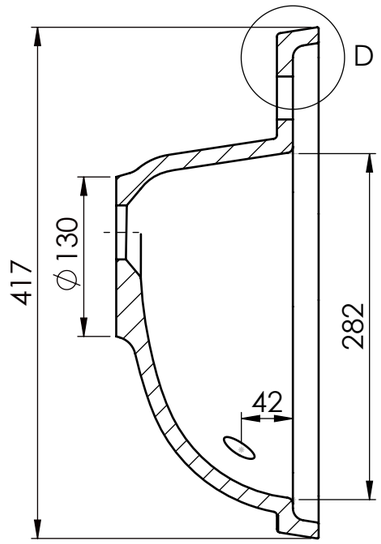

D (1 : 1)

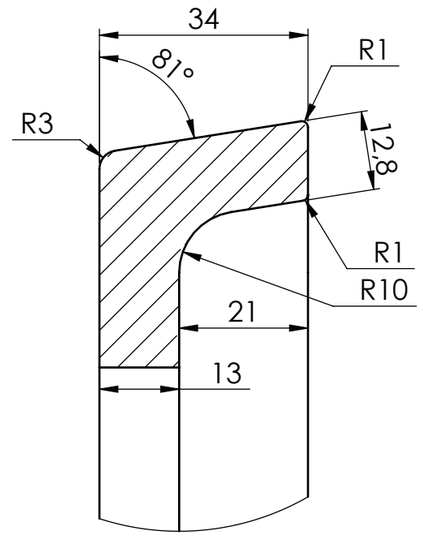

∅60 Flat area/
Powierzchnia płaska

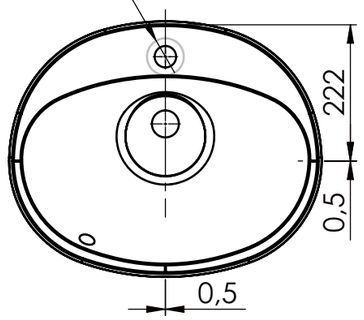

Tolerance length	+3/-0 mm
Tolerance length granite	+1.5/-1.5 mm
Tolerance Taphole Location	+3/-3 mm
Tolerance overflowhole Location	+3/-3 mm
Tolerance plane bending	+1.5/-1.5 mm

Drawn by	Created Date	Checked by	Art. Name:
Project status	Client		Art. No: 6000330511xx
			Customer ID: STD

Material volume[mm³]	Overflow	Taphole	Main dimensions L x W / H [mm]	Drain
	Yes	1	510 x 417 / 163	Regular
Surface area[mm²]	Sheet Size	Scale		Current revision
		1:5		001

www.icami.com/unlock.htm