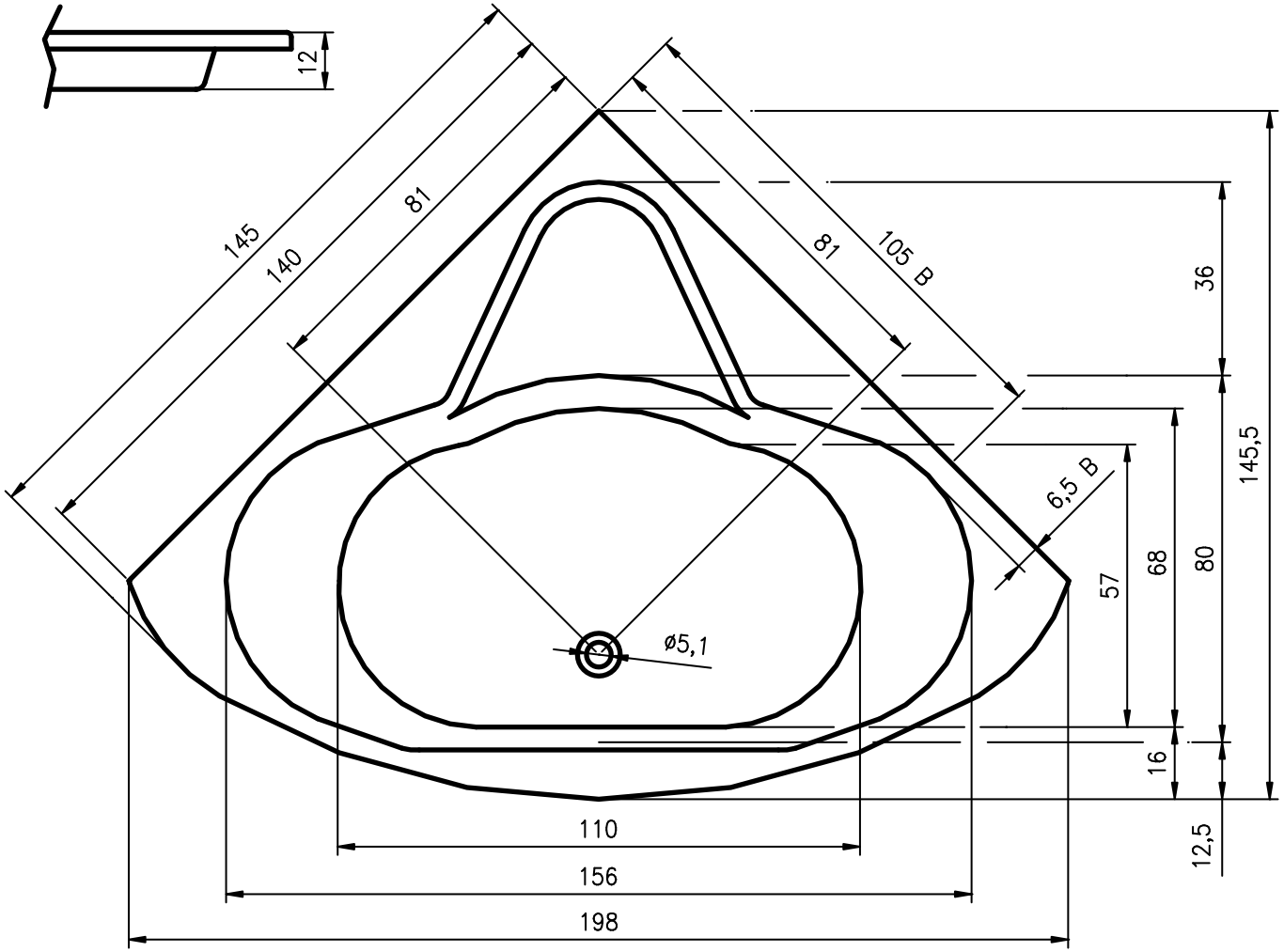

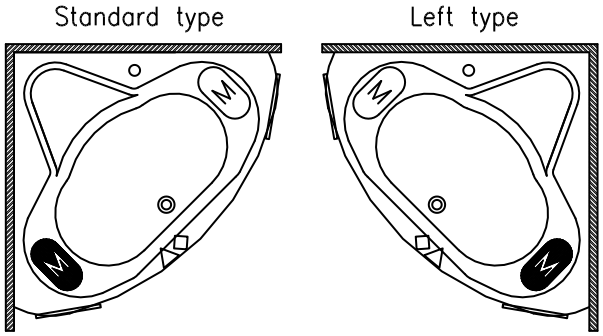

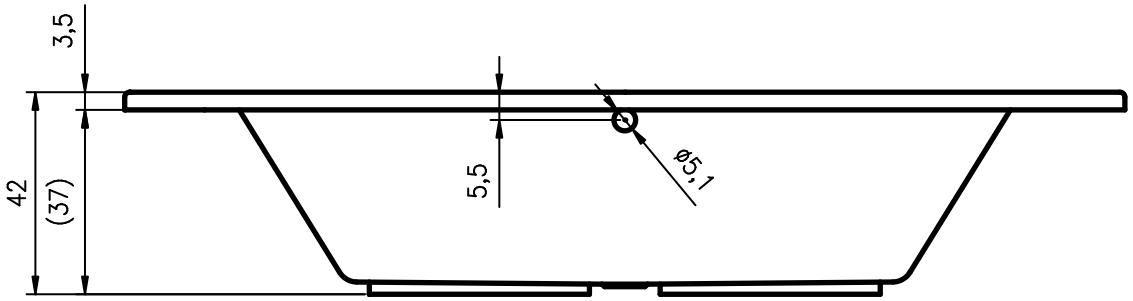

Rev.	Change nr.	Dev.	Date	Rev.	Change nr.	Dev.	Date	Rev.	Change nr.	Dev.	Date	Rev.	Change nr.	Dev.	Date
A			21-12-01	C	13/2006	LH	13-02-06	E				G			
B	52/2004	LH	02-06-04	D	69/2007	LH	12-12-07	F				H			

Scale: 1:10 | Format: A3 | Unit: mm | Sheet: 1 of 1 | Tolerance: NEN-ISO 2768-1 class v

Name:
Cantara 145 x 145

AM. PROJECTION

RIHO
TILBURG
HOLLAND
TEL:(0)13 5728728 FAX:(0)13 5720262

Drawn: JB | Date: 06-10-1998 | Project: Pavo
Introduced by tech. change:
Article nr.:
Drawing nr.: BC220000